FURUKAWA ROCK DRILL USA
ROCK DRILL DIVISION

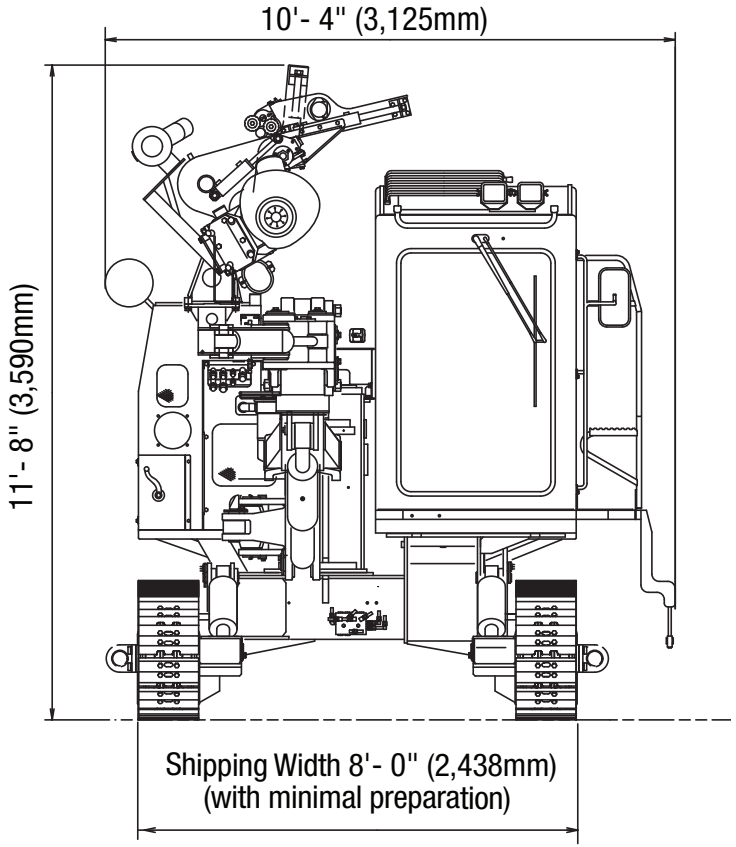

HCR1200 EDII

End View