———	SOLID OUTLINE DEPICTS PRIMARY WORKING LIMIT WITH PM UNIT IN TYP. PERPENDICULAR BREAKING POSITION.
- - - -	DASHED OUTLINE DEPICTS MAXIMUM POSSIBLE REACH OF KENT'S PM UNIT
	SECTIONED AREA DENOTES SECONDARY WORKING ZONES OF TOOL.
	SHADED AREA DENOTES PRIMARY WORKING ZONE WITH TOOL REMAINING PERPENDICULAR.
— — —	PHANTOM OUTLINED UNIT AND ATTACHMENT SHOWS ALTERNATE POSITIONS OF BOOM AND ATTACHMENT.

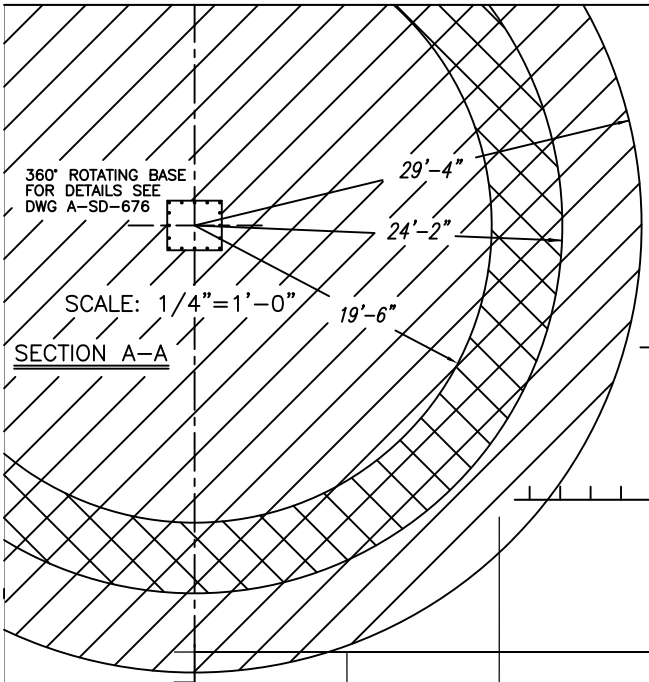

Kent Boom Mounted Breaker

Model: PM-24HD
Hammer: KF9QT

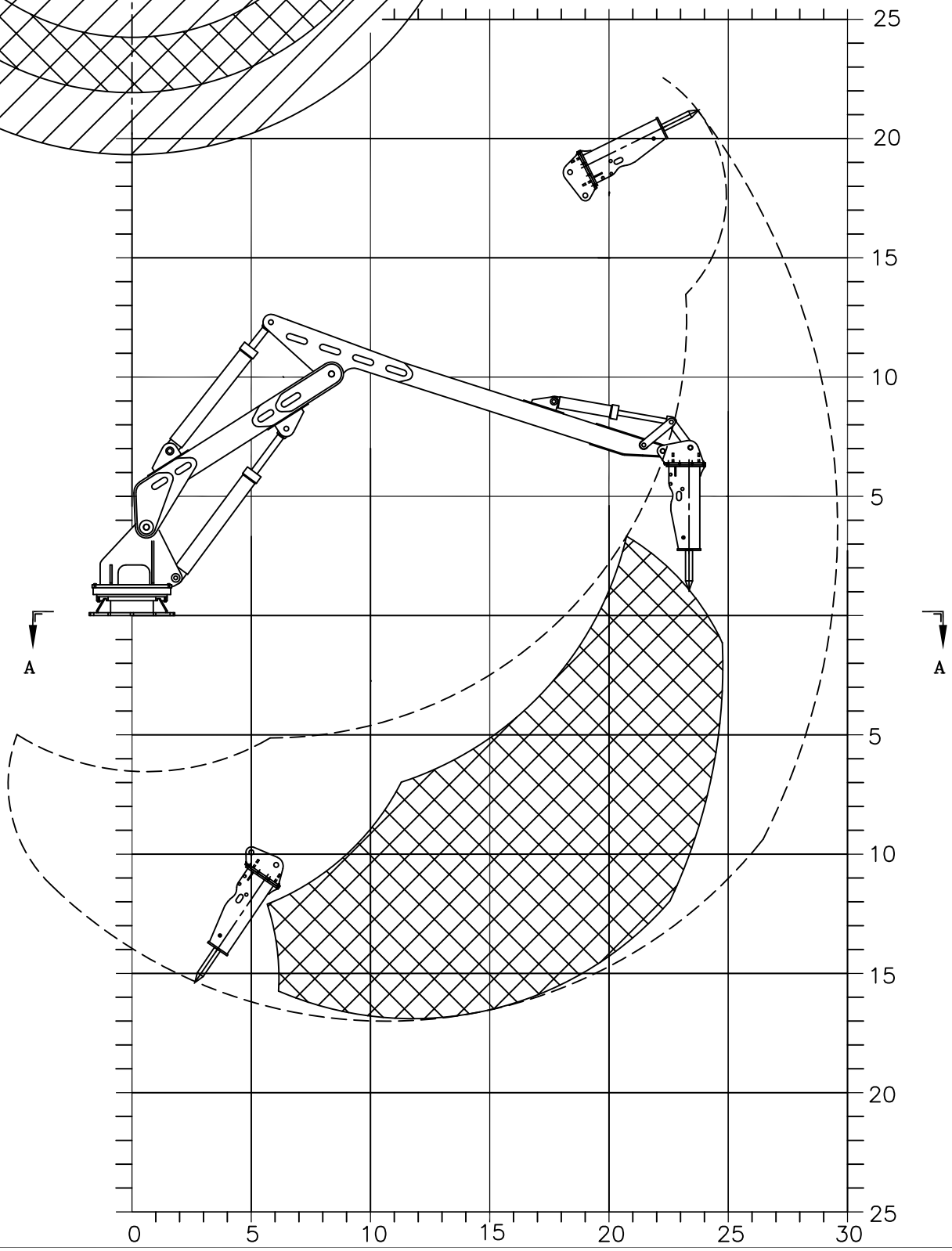

KENT AIR TOOL CO.
711 LAKE STREET, KENT, OHIO 44240

THIS DWG IS THE PROPERTY OF KENT AIR TOOL CO. IT MAY NOT BE REPRODUCED, USED, OR DISCLOSED WITHOUT OUR WRITTEN CONSENT

RANGE DRAWING FOR PM-24HD C/W KF9QT

DATE: 9-15-05
DRW BY: EJH
CHK BY:
APP BY:
WEIGHT:
SCALE: 1/24=1
SD-1232
D

ITEM	PART No.	QTY	DESCRIPTION

REVISION	LTR	E.C.N.	BY	CHK	DATE
REVISION	LTR	E.C.N.	BY	CHK	DATE
REVISION	LTR	E.C.N.	BY	CHK	DATE
REVISION	LTR	E.C.N.	BY	CHK	DATE