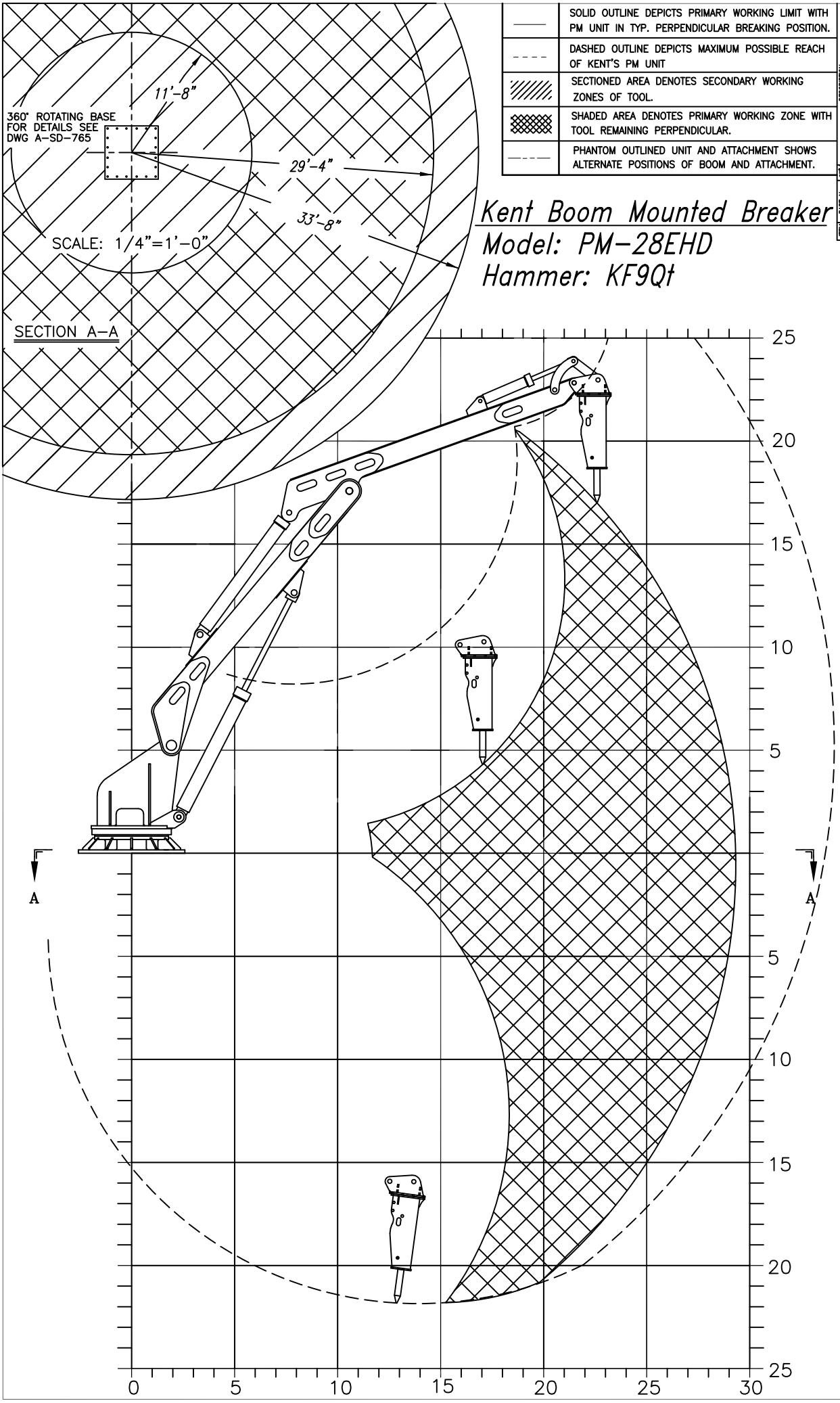
SOLID OUTLINE DEPICTS PRIMARY WORKING LIMIT WITH PM UNIT IN TYP. PERPENDICULAR BREAKING POSITION.
DASHED OUTLINE DEPICTS MAXIMUM POSSIBLE REACH OF KENT'S PM UNIT
SECTIONED AREA DENOTES SECONDARY WORKING ZONES OF TOOL.
SHADED AREA DENOTES PRIMARY WORKING ZONE WITH TOOL REMAINING PERPENDICULAR.
PHANTOM OUTLINED UNIT AND ATTACHMENT SHOWS ALTERNATE POSITIONS OF BOOM AND ATTACHMENT.
11'-8"
360° ROTATING BASE FOR DETAILS SEE DWG A-SD-765
29'-4"
33'-8"
SCALE: 1/4"=1'-0"
SECTION A-A
Kent Boom Mounted Breaker
Model: PM-28EHD
Hammer: KF9Qt
A
A
0°
0°
0°
0
5
10
15
20
25
30
KENT AIR TOOL CO.
711 LAKE STREET, KENT, OHIO 44240
Range Drawing For PM-28EHD With KF9QT
12/13/07
1/2"=1'0"
SD-1267
D
REVISION
DATE
BY
CHK
E.C.N.
LTR